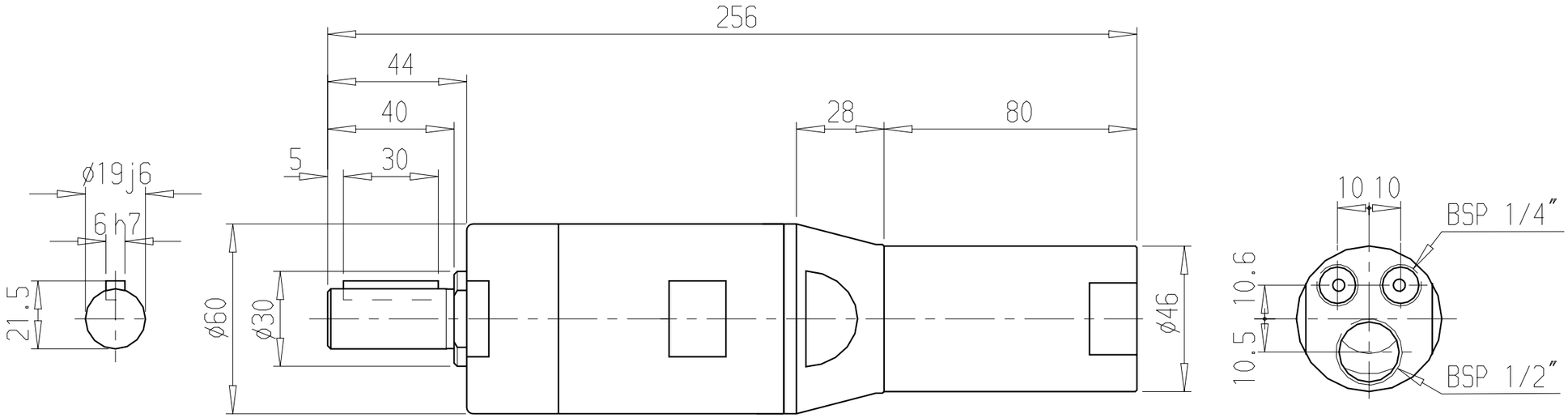

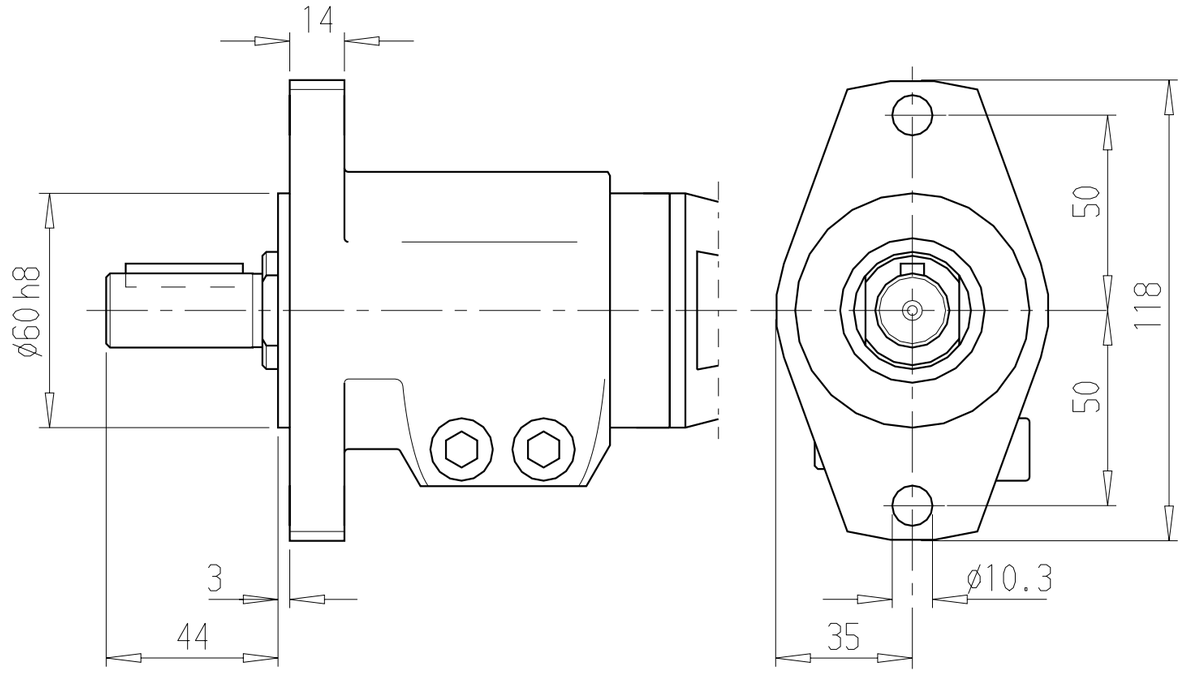

Flange Ordering No. 4430 0569 80

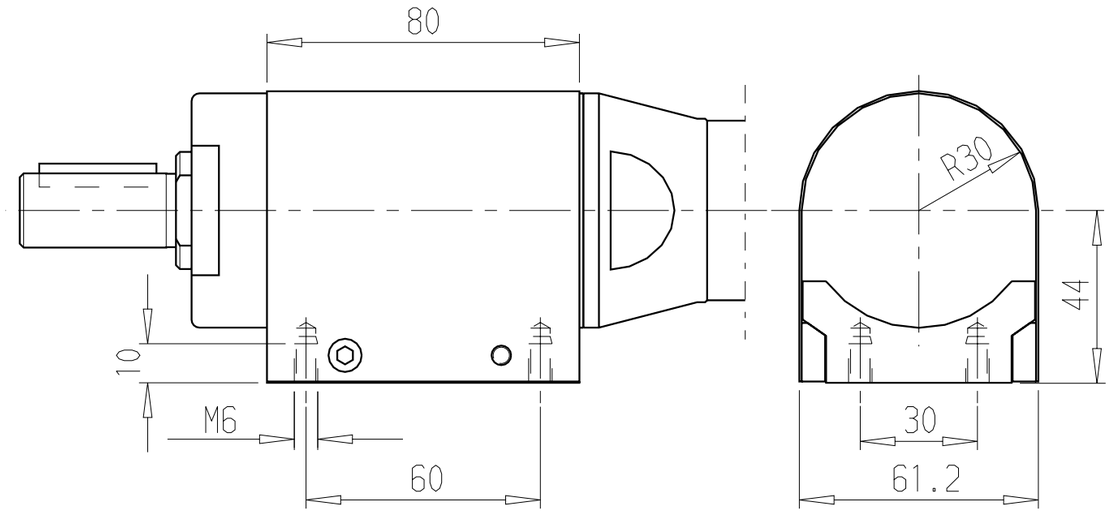

Foot Ordering No. 4430 0178 80