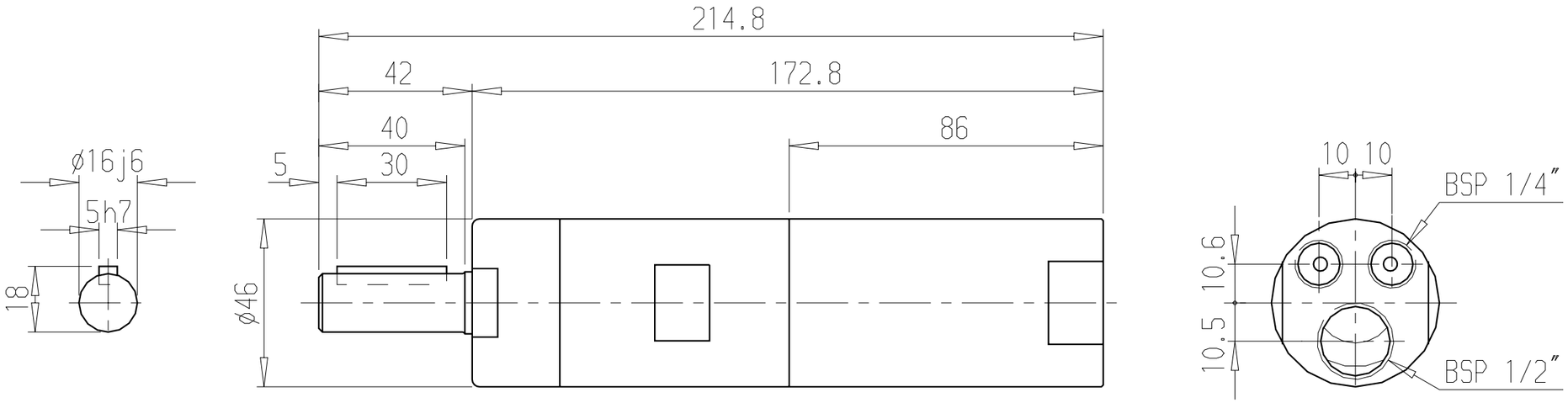

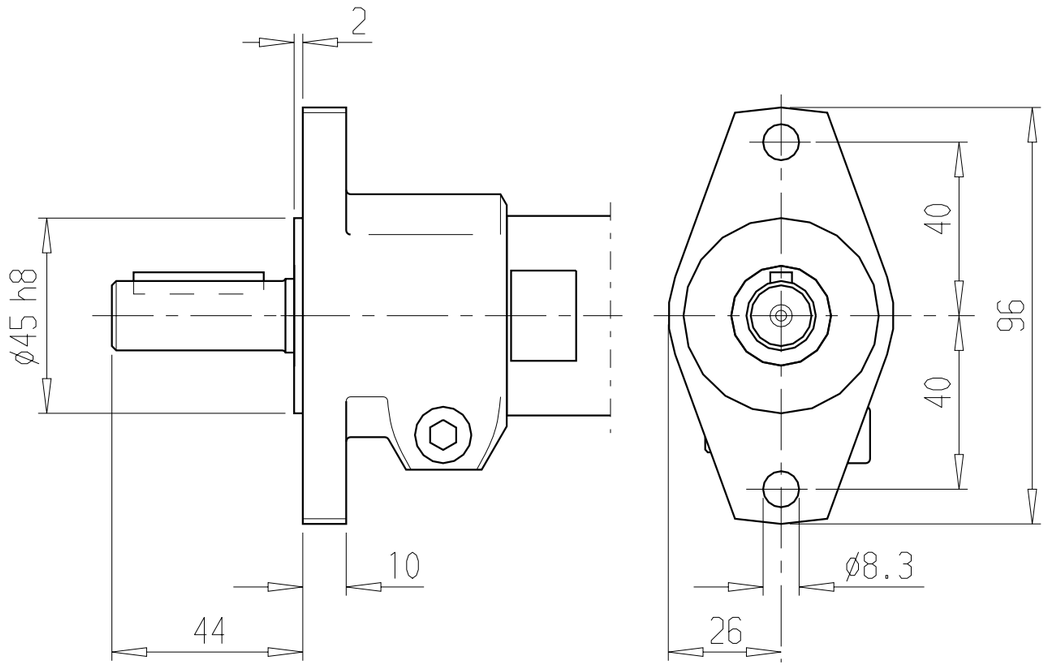

Flange Ordering No. 4430 0490 80

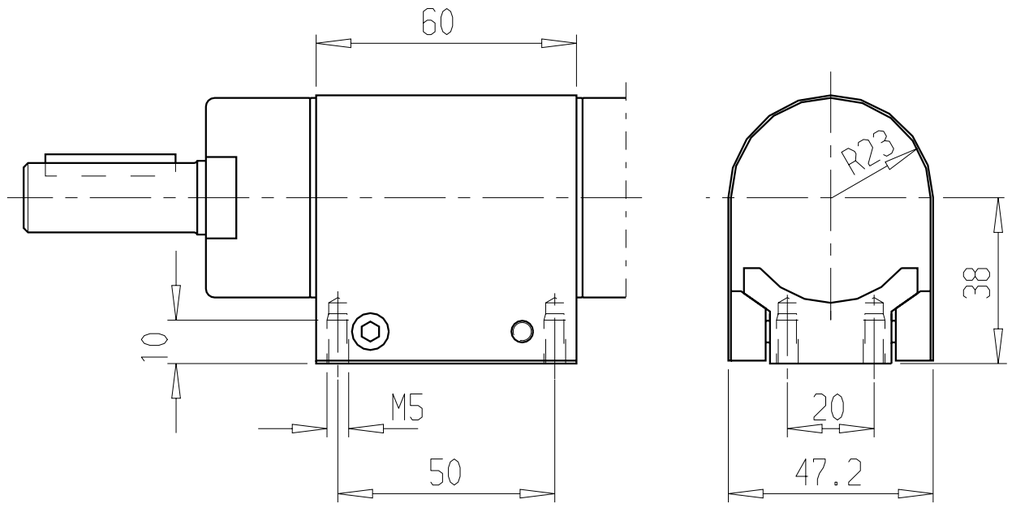

Foot Ordering No. 4430 0575 80