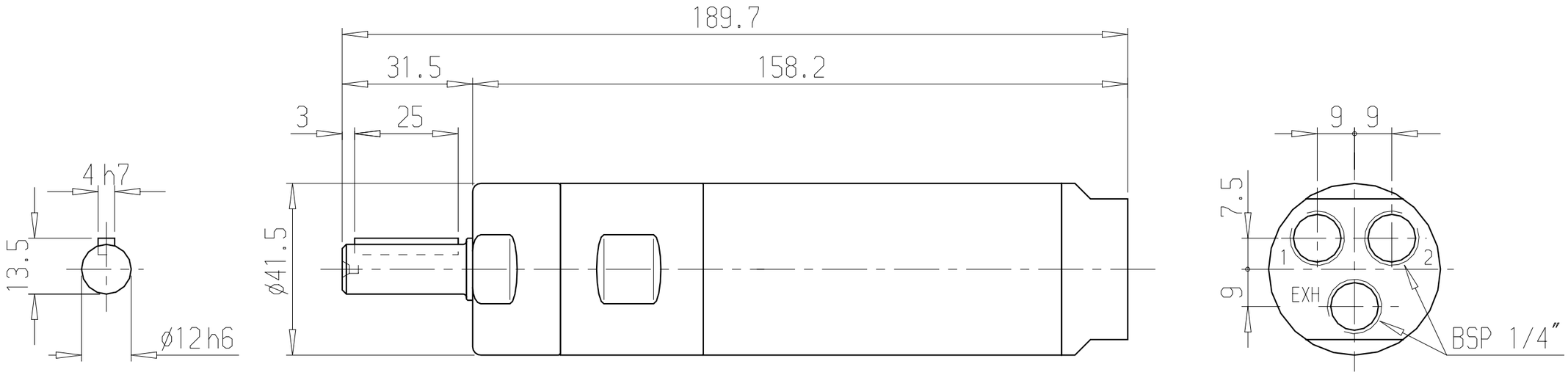

Foot

Ordering No. 4430 0855 80

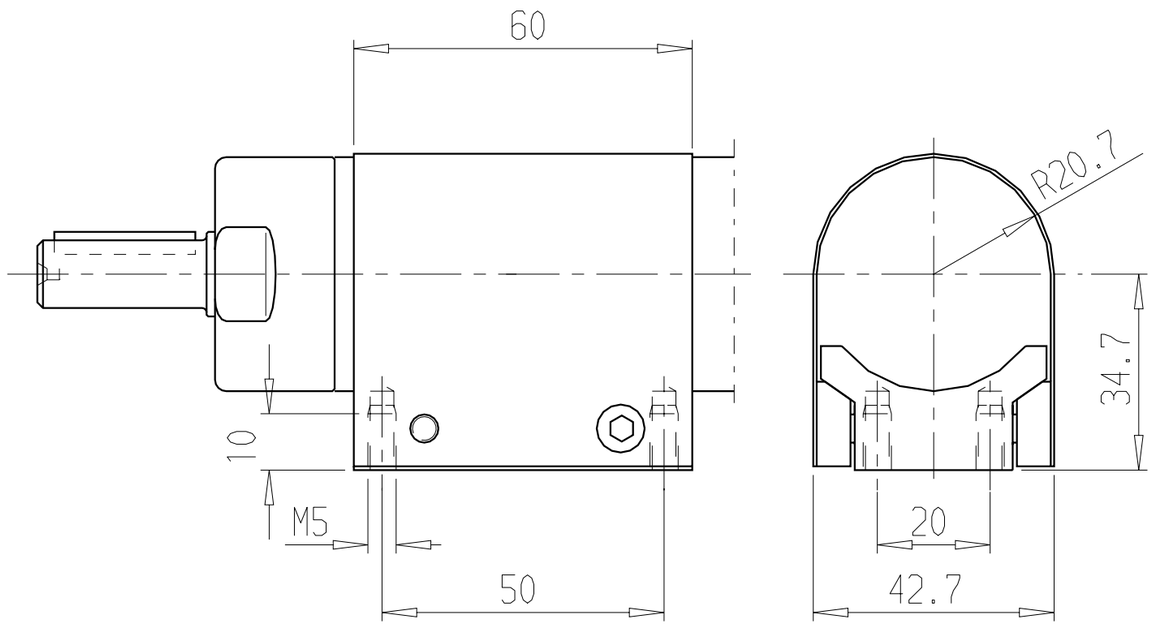

Flange
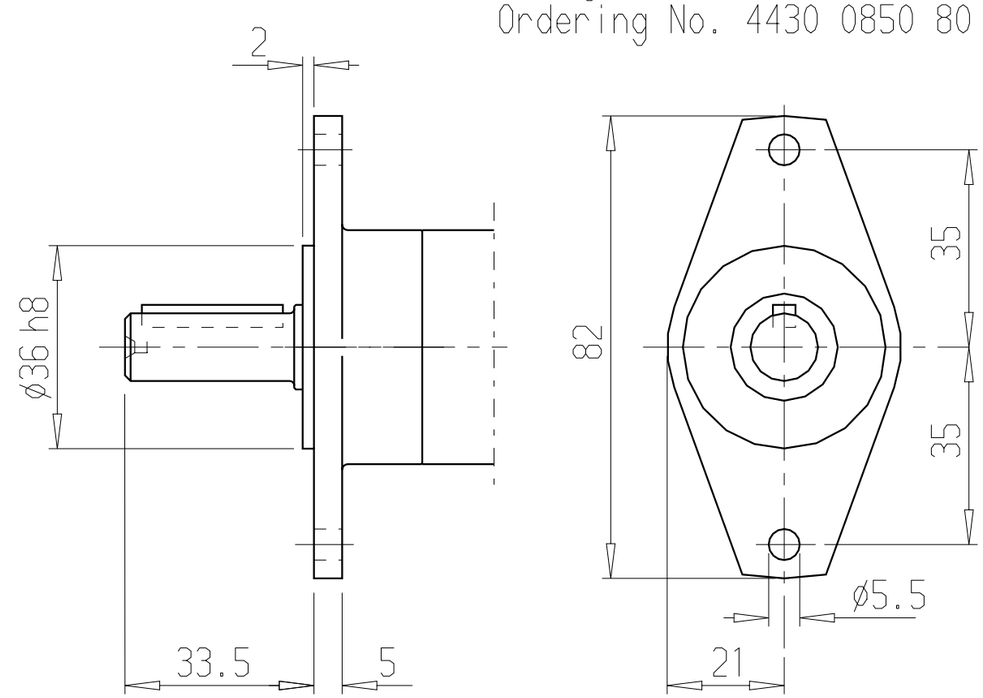
Ordering No. 4430 0850 80