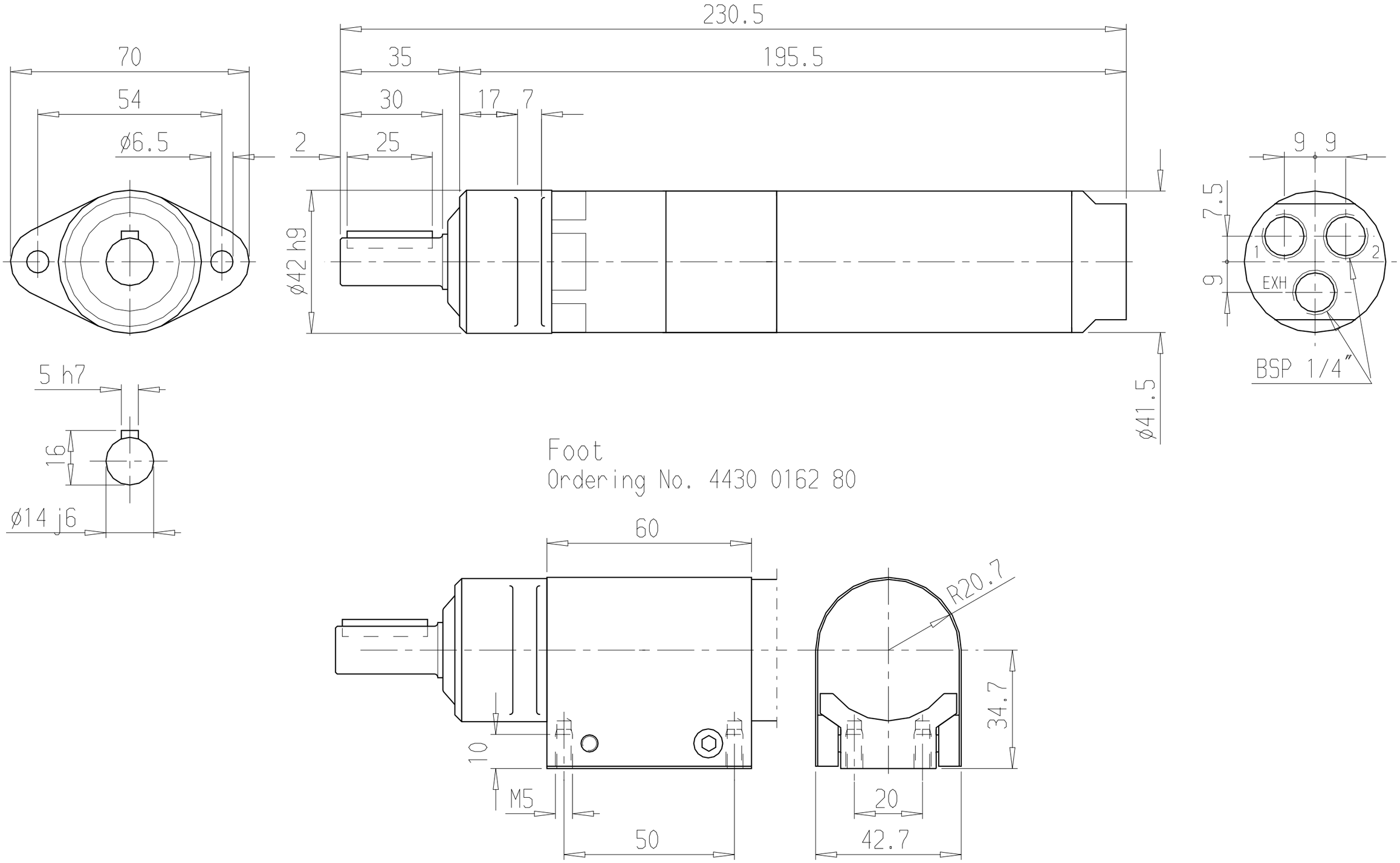
230.5
70
35
195.5
54
30
17
7
ø6.5
2
25
ø42 h9
9
9
7.5
1
2
EXH
9
BSP 1/4"
ø41.5
5 h7
16
ø14 j6
Foot
Ordering No. 4430 0162 80
60
R20.7
34.7
10
M5
20
50
42.7